Entanglement concentration using photon subtraction and Gaussian operations

Jaromír Fiurášek

Department of Optics, Palacky University,
17. listopadu 12, 77146 Olomouc, Czech Republic

european social fund in the czech republic
EUROPEAN UNION
MINISTRY OF EDUCATION, YOUTH AND SPORTS
OP Education for Competitiveness
INVESTMENTS IN EDUCATION DEVELOPMENT

Outline

1. Gaussian states
2. CV Entanglement concentration by photon subtraction
3. Experimental single-photon subtraction
4. Experimental entanglement concentration via photon subtraction
5. New protocols combining photon subtraction and Gaussian operations
6. Detailed analysis of the proposed protocol

Gaussian states

Experimentally accessible in the lab

- Coherent states - laser light
- Squeezed and entangled states - OPA, NOPA

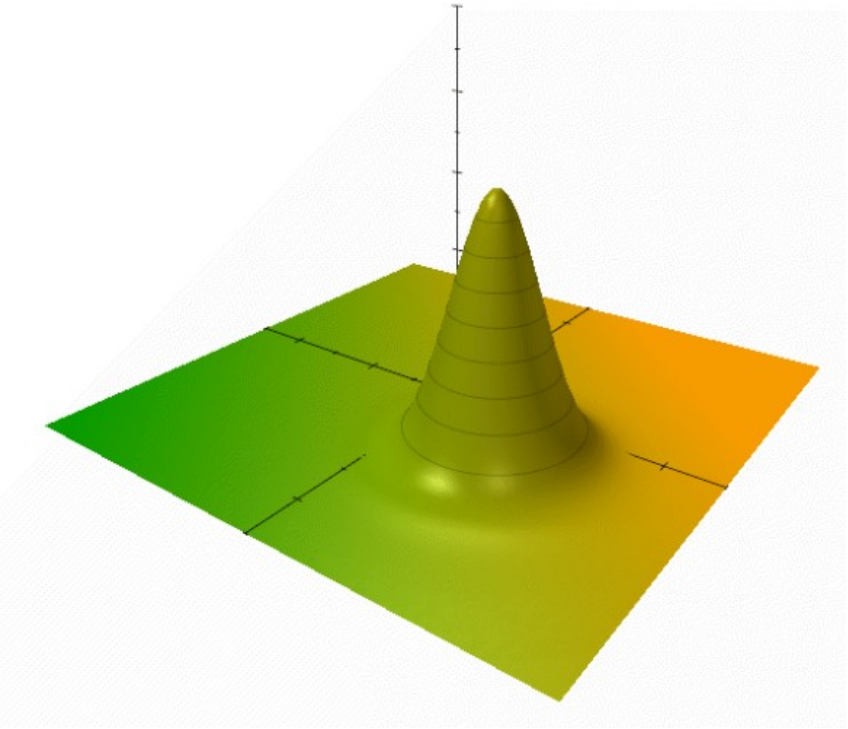

Gaussian states

Experimentally accessible in the lab

- Coherent states - laser light
- Squeezed and entangled states - OPA, NOPA

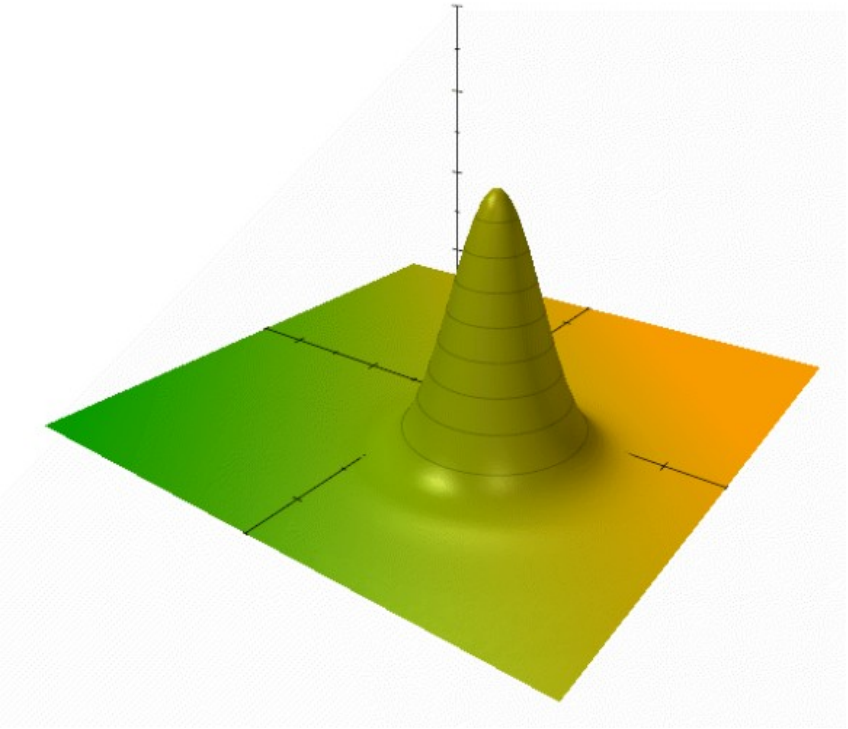

Simple mathematical description

- Gaussian form of Wigner function
- Fully characterized by first and second moments of quadrature operators
- First moments can be set to zero by local displacements
- Complete description in terms of covariance matrix

Gaussian states

Crucial resource for CV quantum information processing

- Quantum teleportation (Braunstein-Kimble protocol)
- Quantum key distribution
- Quantum computing with CV cluster states

Gaussian states

Crucial resource for CV quantum information processing

- Quantum teleportation (Braunstein-Kimble protocol)
- Quantum key distribution
- Quantum computing with CV cluster states

No-go theorems

- Gaussian entanglement cannot be distilled using Gaussian operations only
- Gaussian quantum error correction is impossible for Gaussian noisy channels
- Gaussian states and operations are not sufficient for universal quantum computing

Non-Gaussian operations or states are required!

Improving CV teleportation by conditional pohoton subtraction

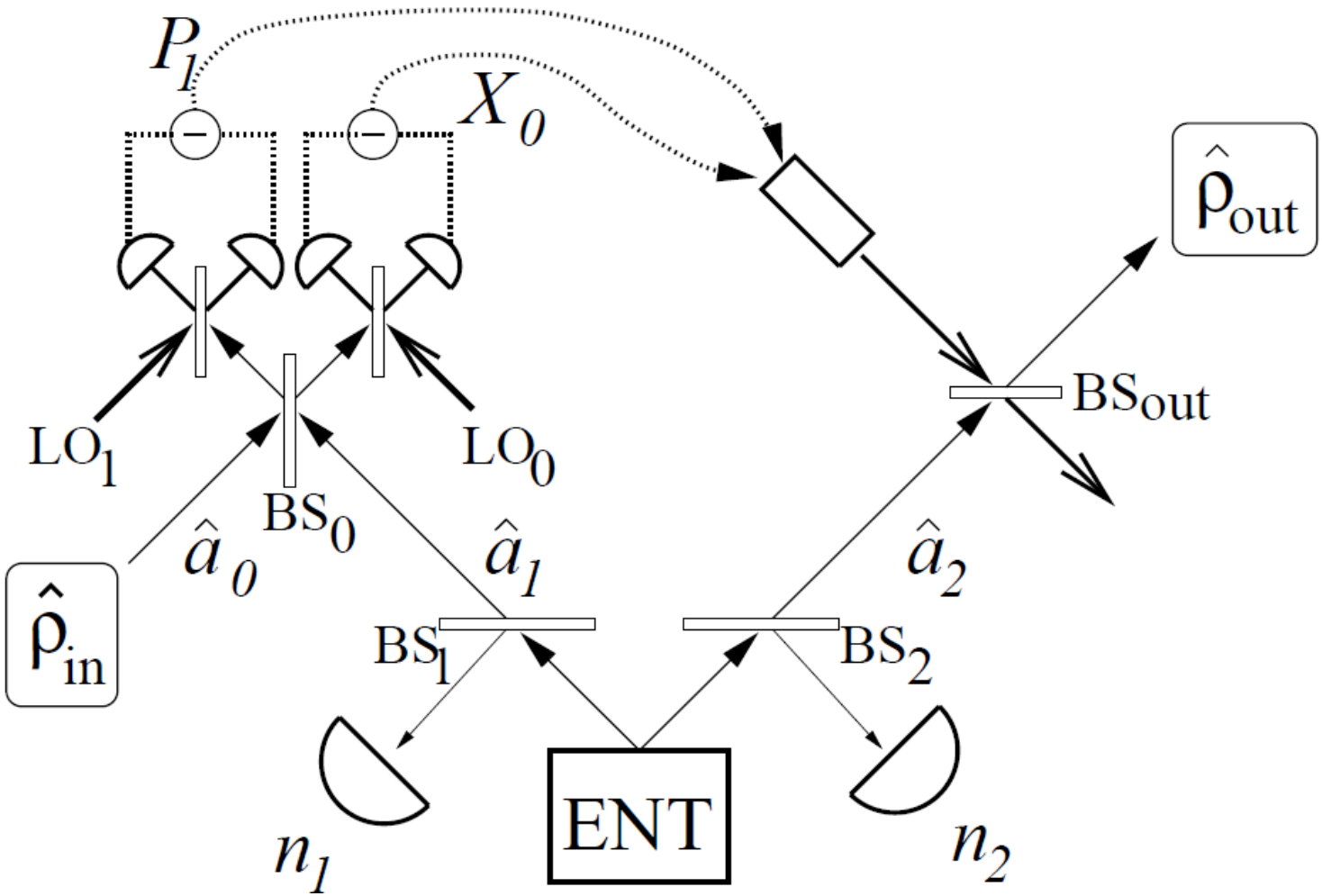

T. Opatrny, G. Kurizki, G. Welsch, PRA **61**, 032302 (2000).

Improving CV teleportation by conditional pohoton subtraction

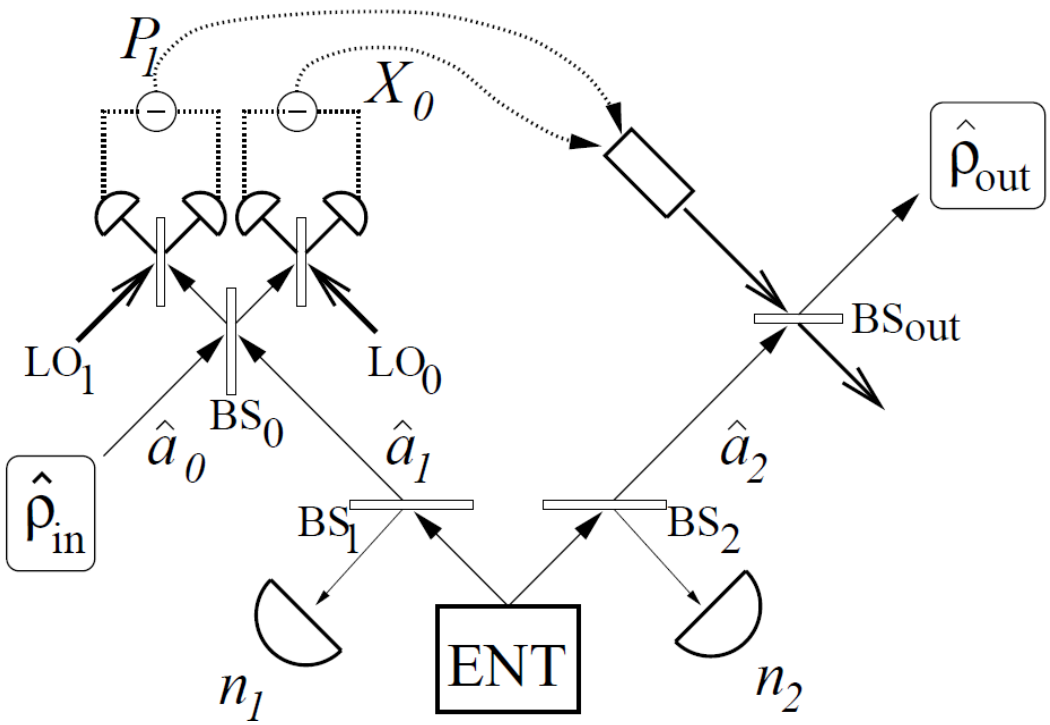

Input two-mode suqeezed vacuum:

$$|\Psi\rangle_{AB} = \sqrt{1-\lambda^2}\sum_{n=0}^{\infty}\lambda^n |n\rangle_A |n\rangle_B$$

$$n_1 = n_2 = 1$$

T. Opatrny, G. Kurizki, G. Welsch, PRA **61**, 032302 (2000).

Improving CV teleportation by conditional pohoton subtraction

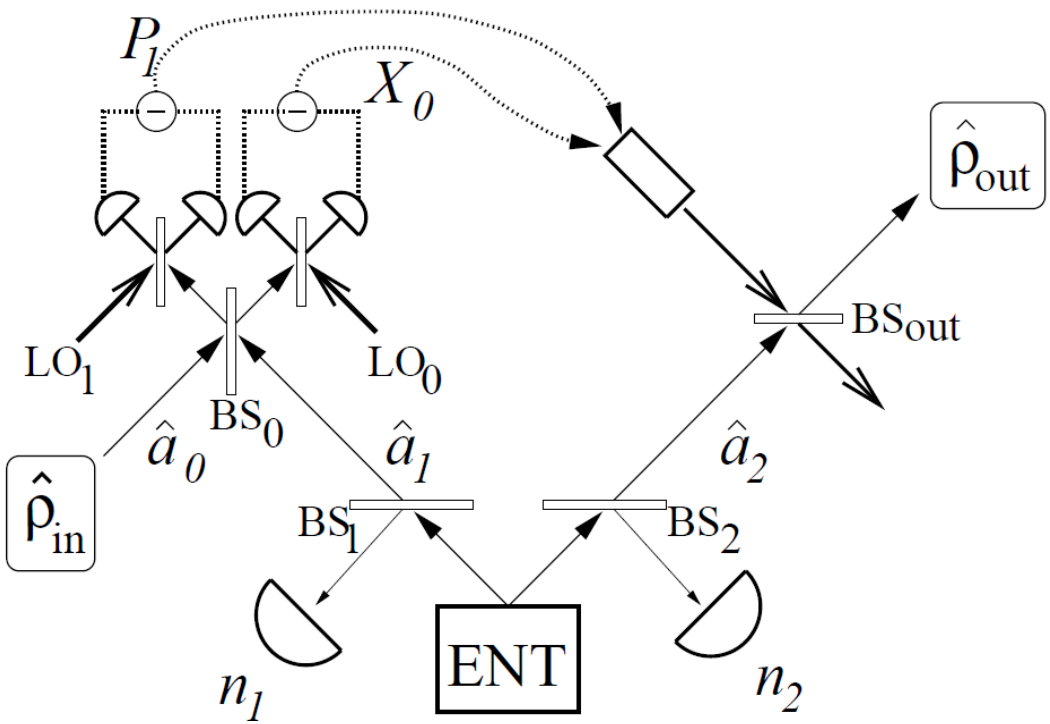

$$n_1 = n_2 = 1$$

Input two-mode suqeezed vacuum:

$$|\Psi\rangle_{AB} = \sqrt{1-\lambda^2}\sum_{n=0}^{\infty}\lambda^n |n\rangle_A |n\rangle_B$$

Concentrated two-mode entangled state:

$$|\Phi\rangle_{AB} \propto \hat{a}\,\hat{b}\,|\Psi\rangle_{AB}$$

$$|\Phi\rangle_{AB} \propto \sum_{n=0}^{\infty}\lambda^{n+1}(n+1)|n\rangle_A |n\rangle_B$$

T. Opatrny, G. Kurizki, G. Welsch, PRA **61**, 032302 (2000).

Experimental single-photon subtraction

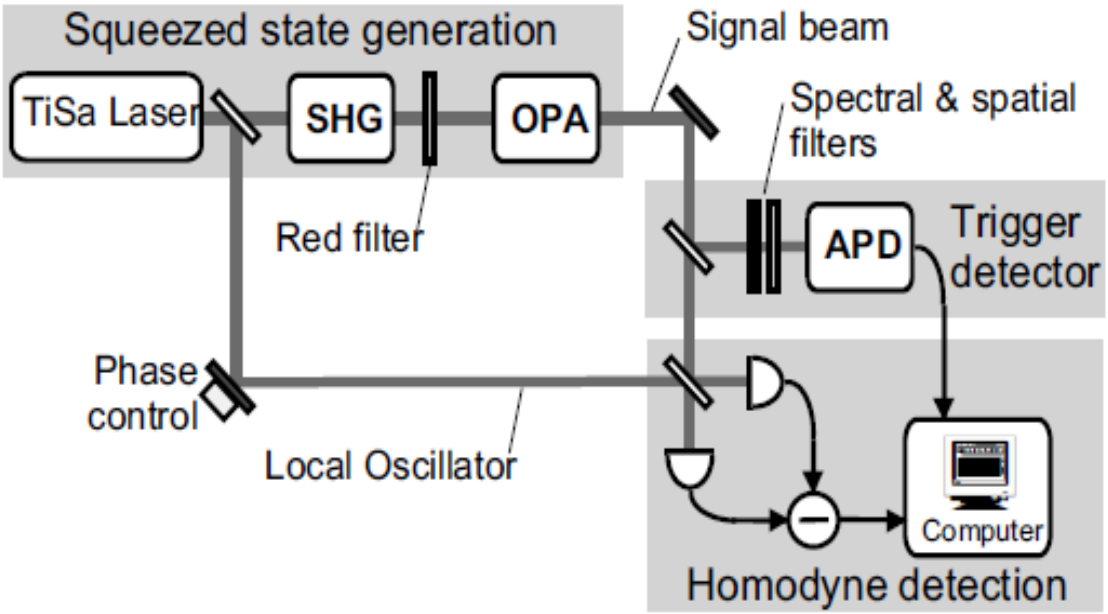

J. Wenger, R. Tualle-Brouri, P. Grangier, Phys. Rev. Lett **92**, 153601 (2004).

Experimental single-photon subtraction

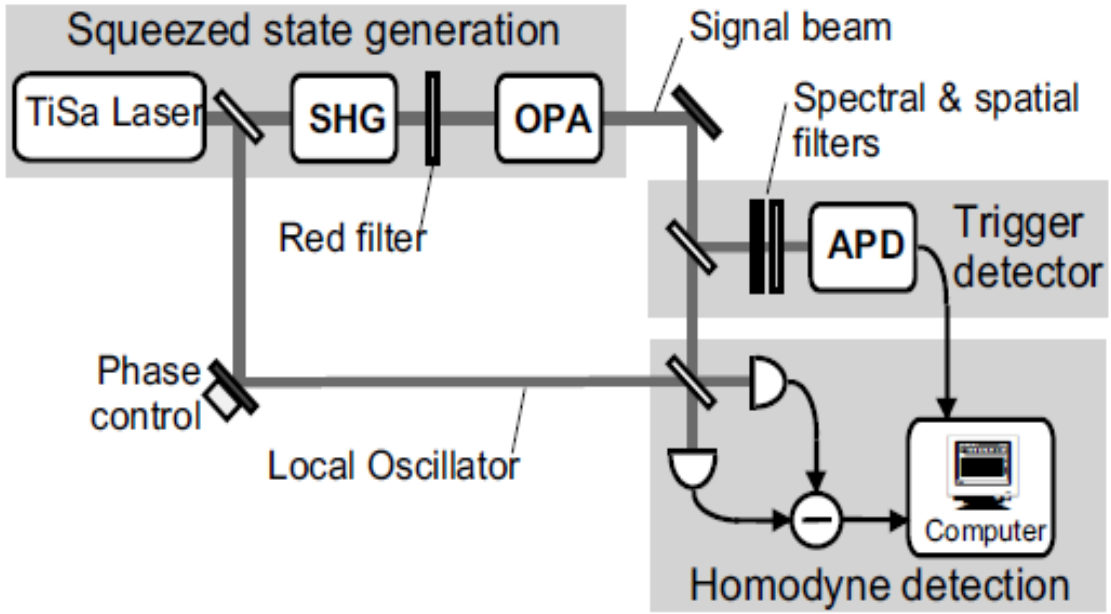

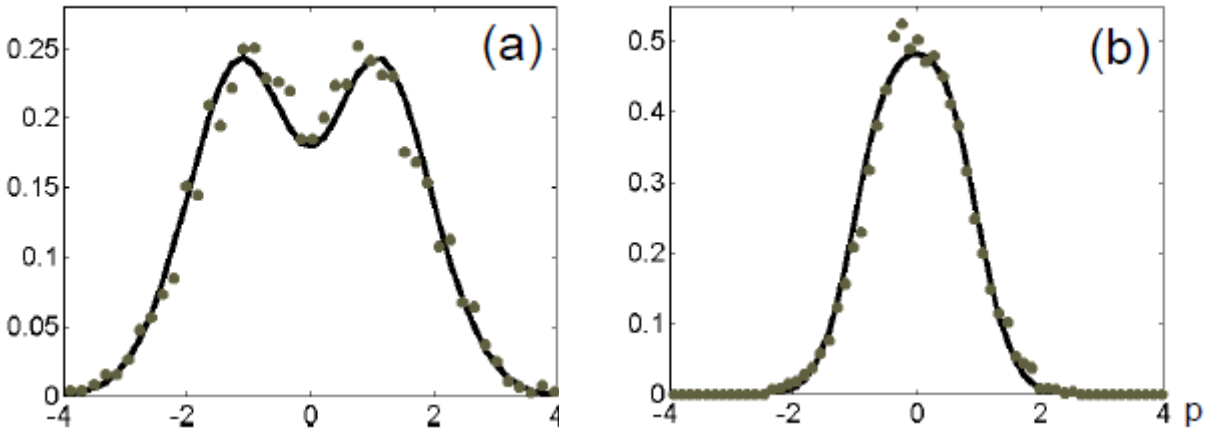

J. Wenger, R. Tualle-Brouri, P. Grangier, Phys. Rev. Lett **92**, 153601 (2004).

Experimental single-photon subtraction

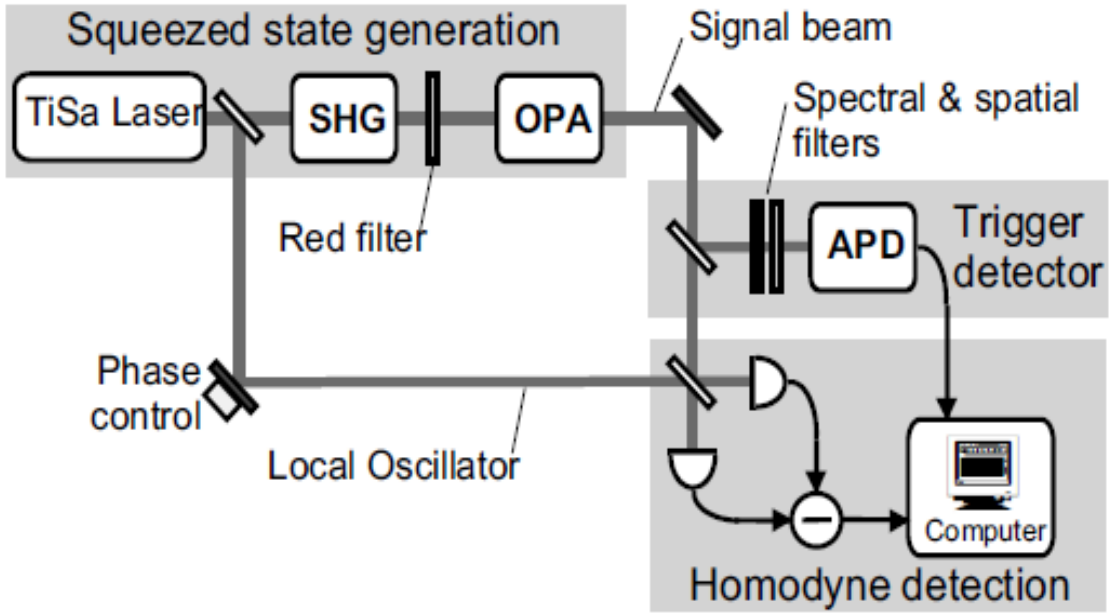

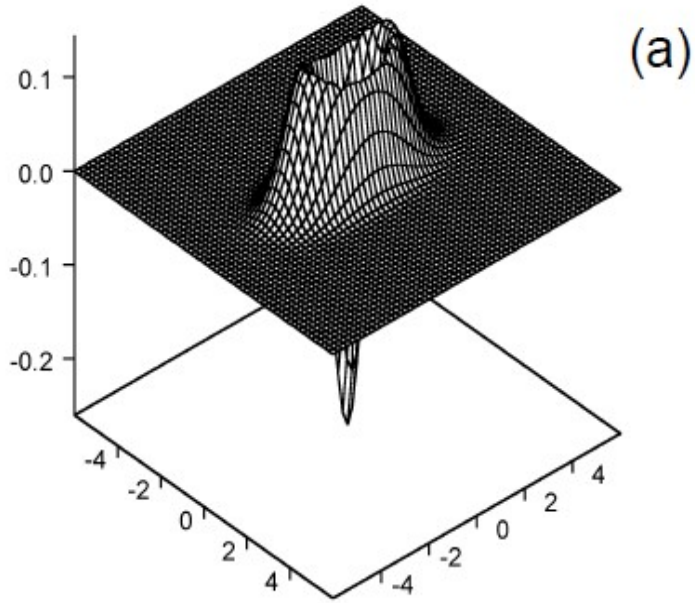

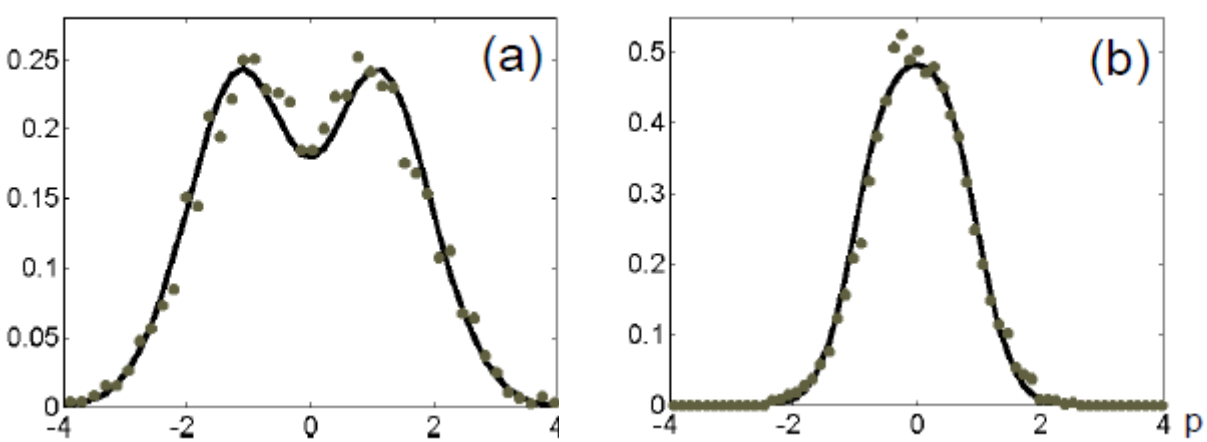

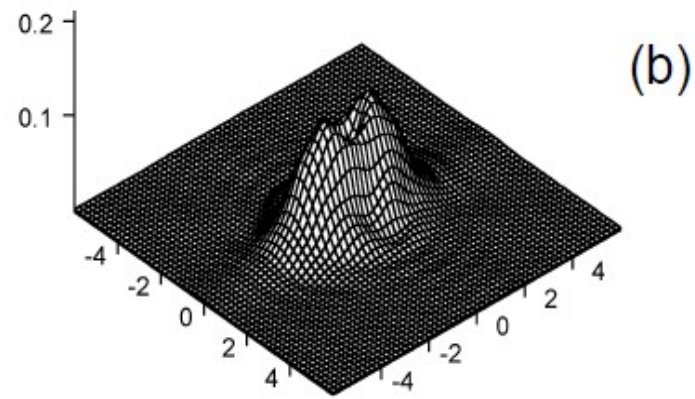

J. Wenger, R. Tualle-Brouri, P. Grangier, Phys. Rev. Lett **92**, 153601 (2004).

Further developments

E.S. Polzik group, NBI Copenhagen
- photon subtraction from CW squeezed vacuum

M. Sasaki group, Tokio
- photon subtraction from CW squeezed vacuum, high quality kitten states
- generation of arbitrary squeezed superpositions of vacuum and single photon states

P. Grangier group, Institute d'Optique, Orsay
- improved performance of the scheme
- generation of larger cat-like states
- generation of entangled cat states

U.L. Andersen group,DTU Lyngby
- photon subtraction from picosecond pulsed squeezed light
- Hadamard gate for cat-state qubits

E. Knill group, NIST Boulder
- large cats, simultaneous subtraction of 3 photons from squeezed vacuum

What about entanglement concentration?

Increasing entanglement by coherent photon subtraction

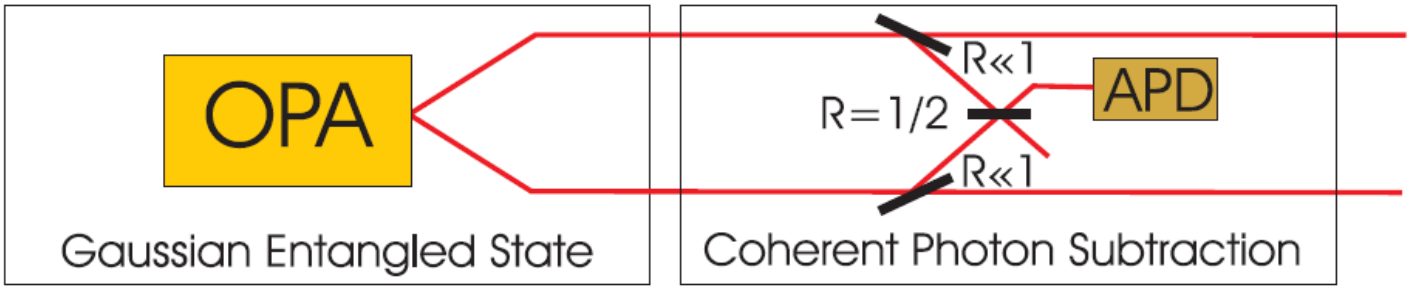

A. Ourjoumtsev, A. Dantan, R. Tualle-Brouri, P. Grangier, PRL **98**, 030502 (2007).

Increasing entanglement by coherent photon subtraction

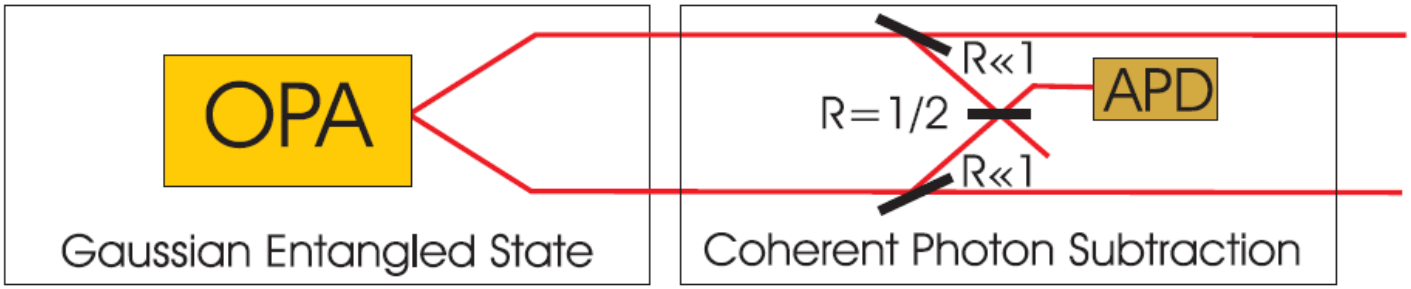

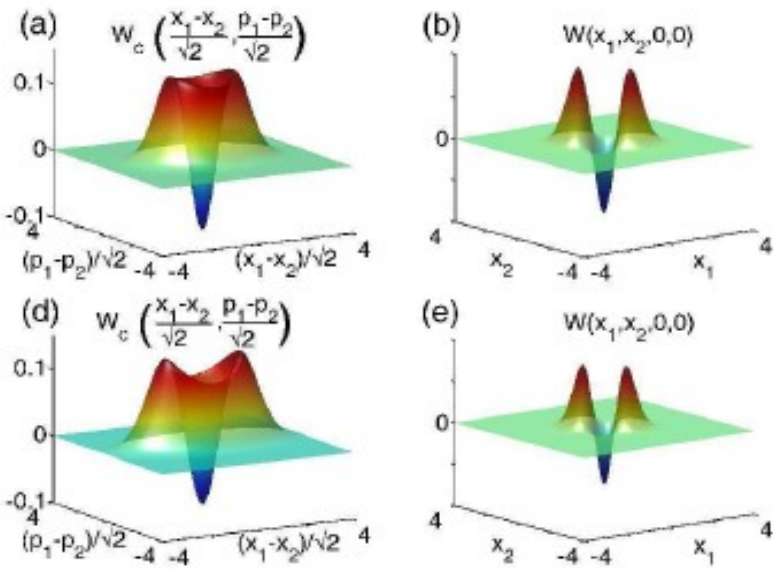

A. Ourjoumtsev, A. Dantan, R. Tualle-Brouri, P. Grangier, PRL **98**, 030502 (2007).

Increasing entanglement by coherent photon subtraction

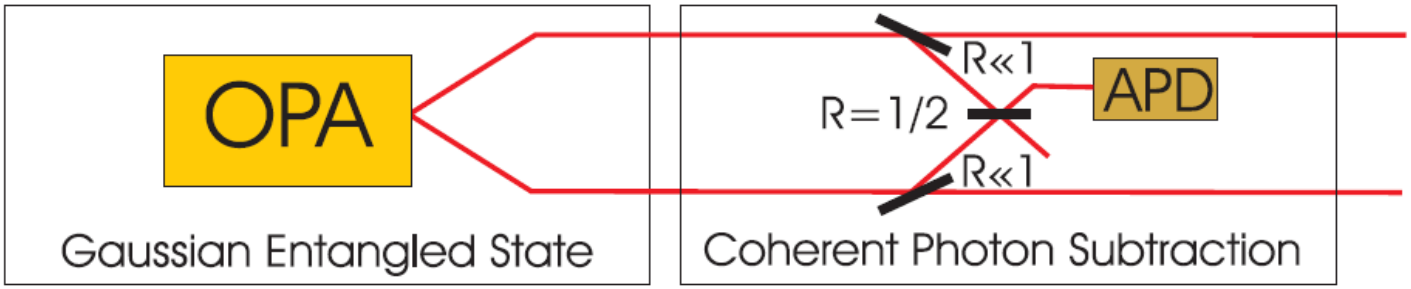

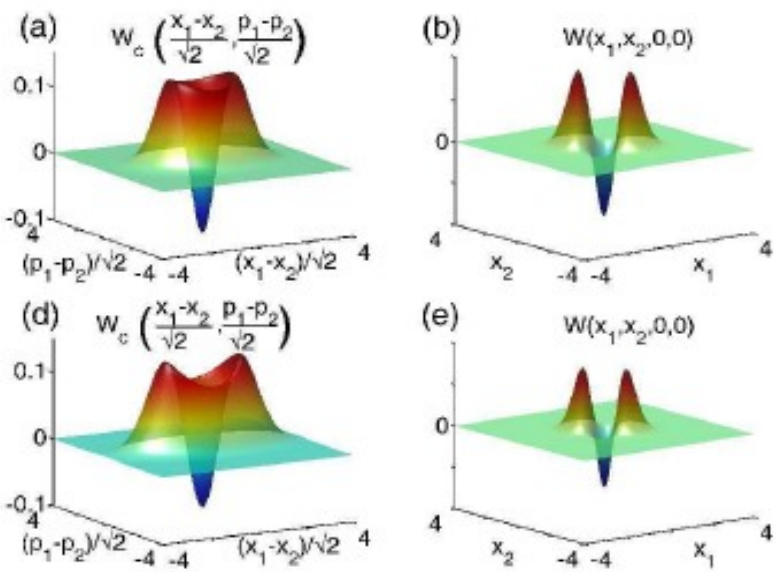

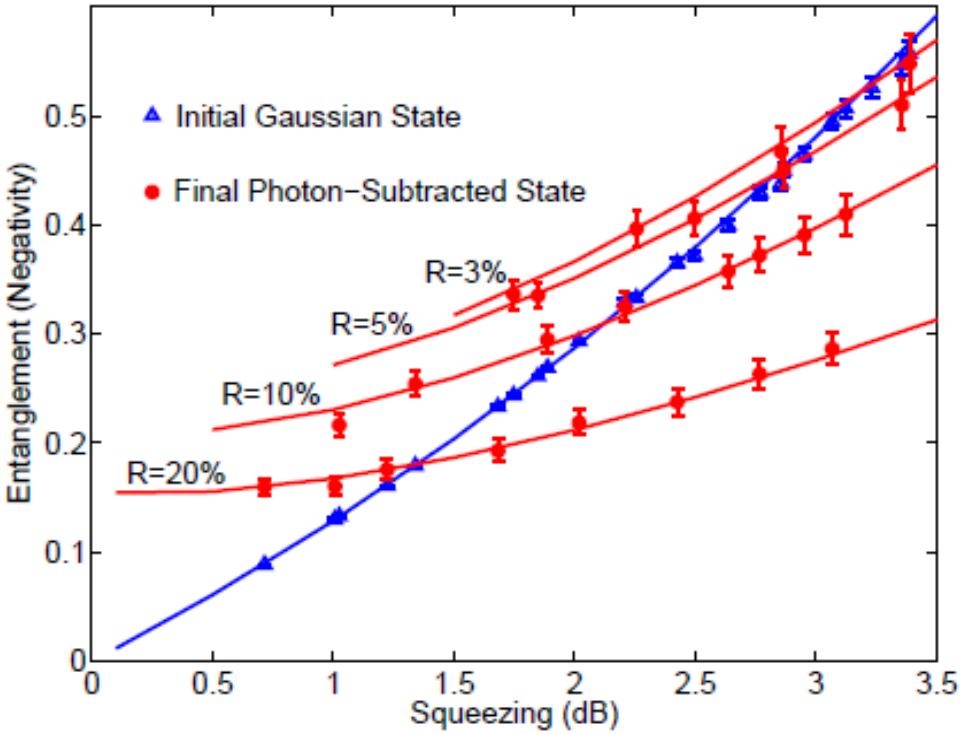

A. Ourjoumtsev, A. Dantan, R. Tualle-Brouri, P. Grangier, PRL **98**, 030502 (2007).

Entanglement distillation by photon subtraction

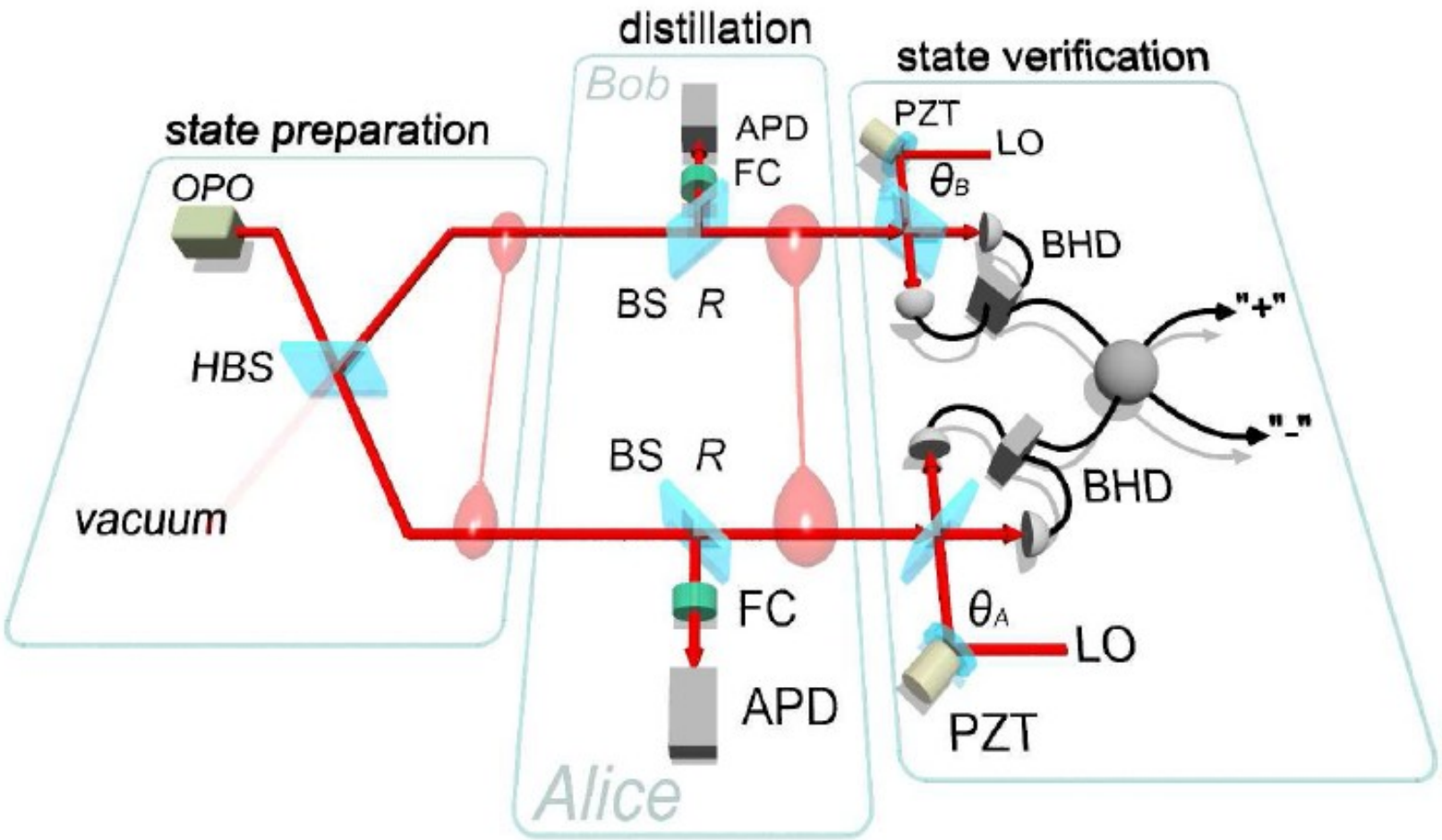

H. Takahashi, J.S. Neergaard-Nielsen, M. Takeuchi, M. Takeoka, K. Hayasaka, A. Furusawa, M. Sasaki, Nature Photonics **4**, 178 (2010).

Entanglement distillation by photon subtraction

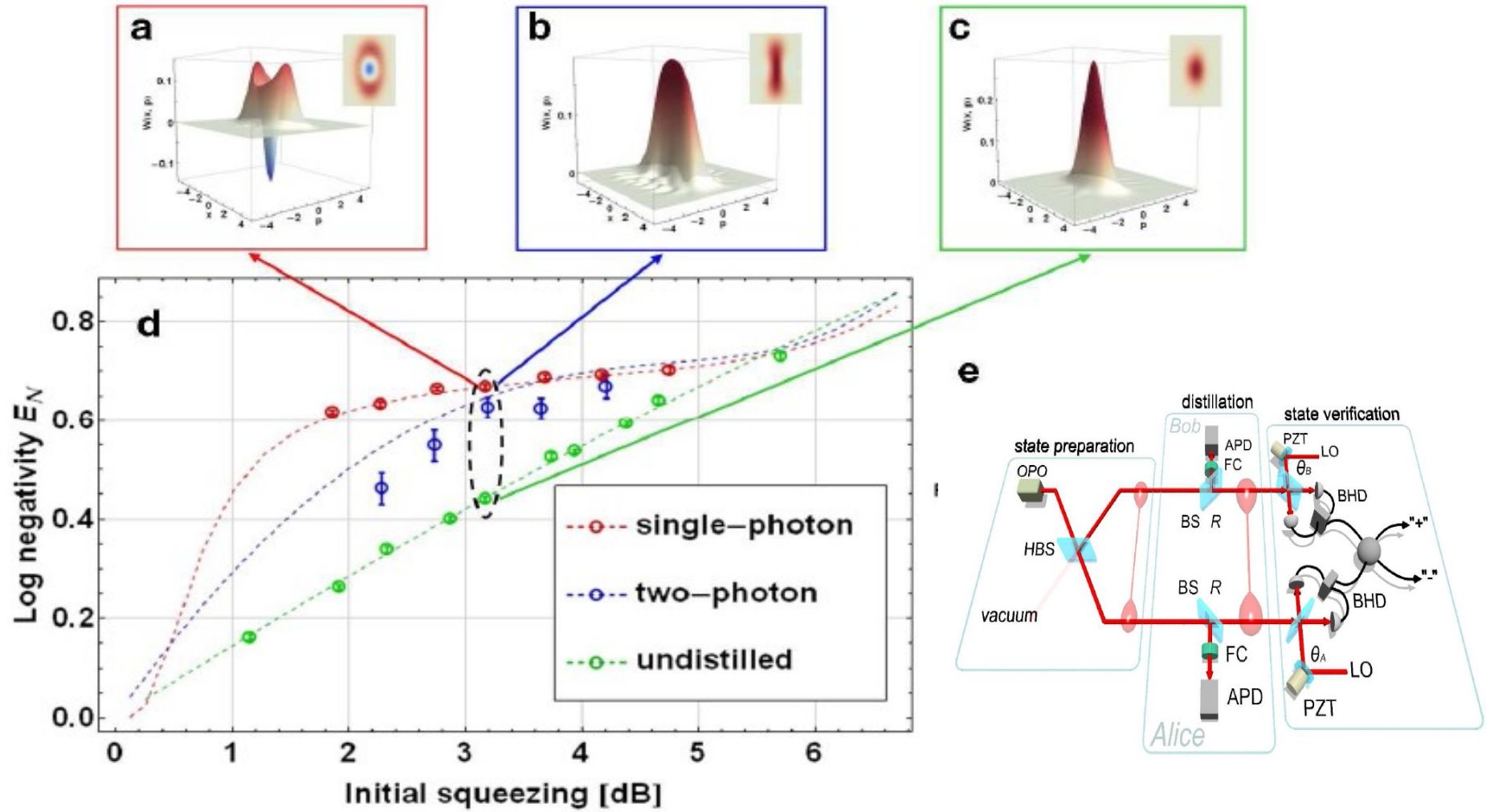

H. Takahashi, J.S. Neergaard-Nielsen, M. Takeuchi, M. Takeoka, K. Hayasaka, A. Furusawa, M. Sasaki, Nature Photonics **4**, 178 (2010).

Improving entanglement concentration by photon subtraction using local Gaussian operations

Motivation:

- explore experimentally feasible Gaussian operations
- enhance performance of the entanglement concentration by photon subtraction

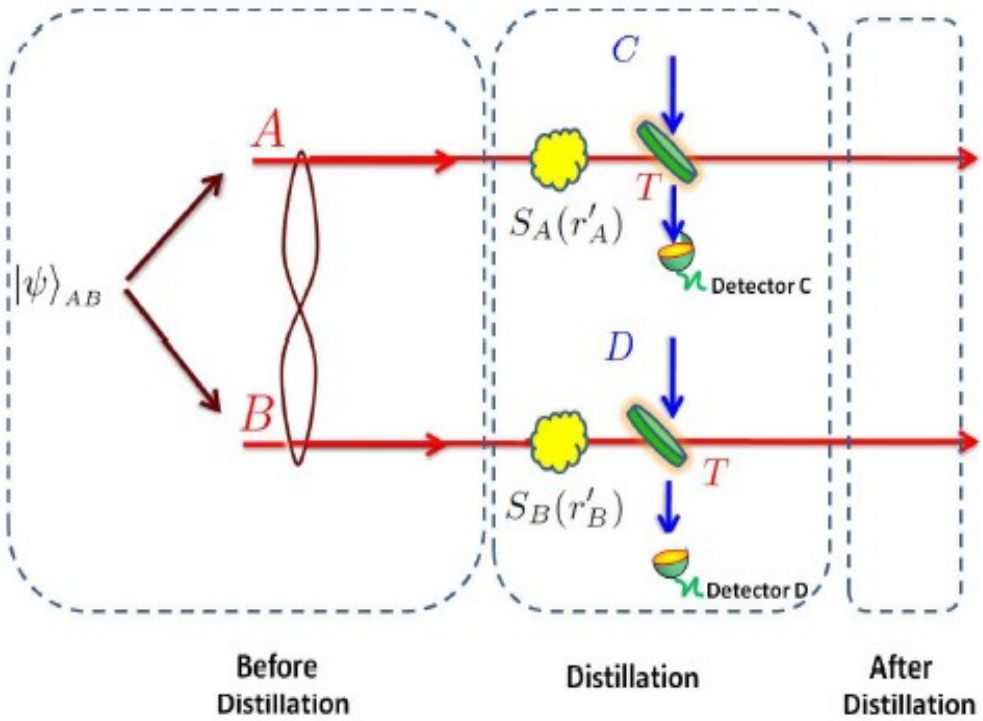

S.Li Zhang, P. van Loock, arXiv:1103.4500 (2011).

Improving entanglement concentration by photon subtraction using local Gaussian operations

Motivation:

- explore experimentally feasible Gaussian operations
- enhance performance of the entanglement concentration by photon subtraction

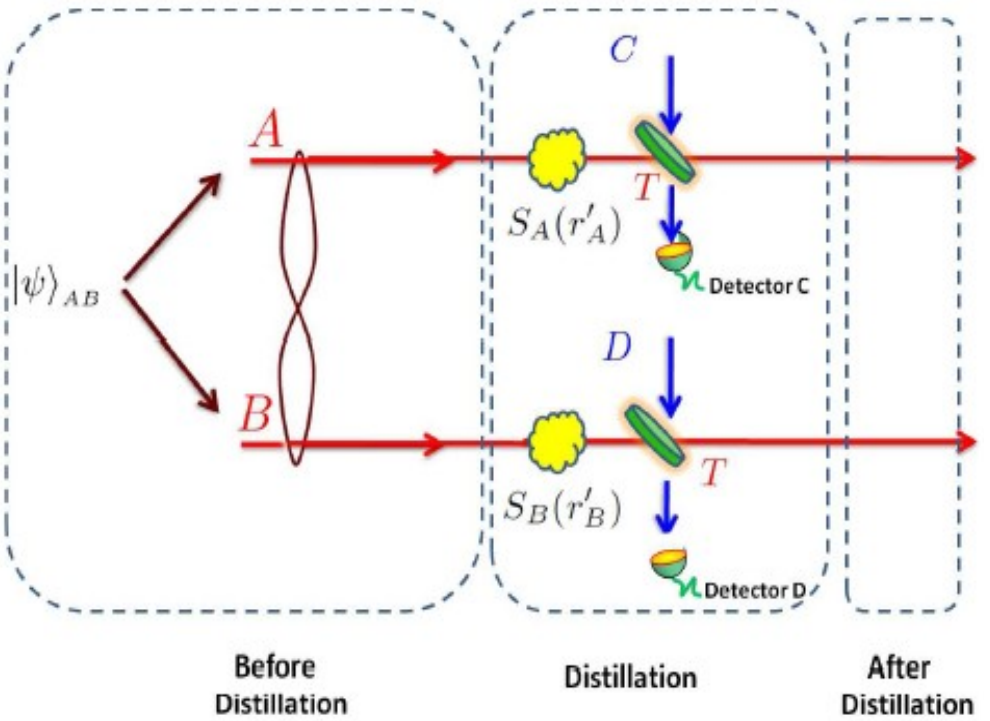

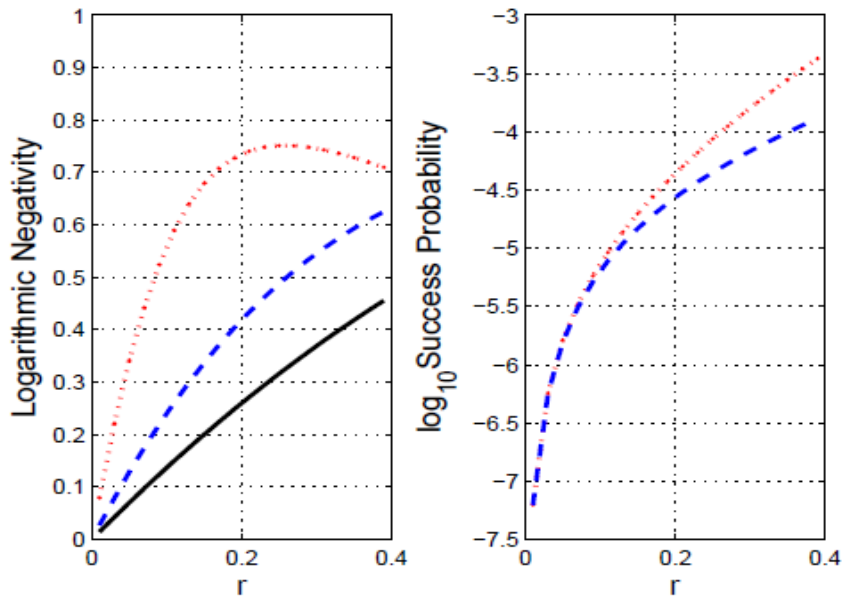

FIG. 3. Mixed-state distillation with $\eta = 0.5$. Comparing the distillation performances between Opatrný's PS strategy (blue, dashed line) and our local-squeezing enhanced PS strategy (red, dot dashed line), for $r \in [0.005, 0.4]$, $T = 0.95$, $r' = r = \text{arctanh}(\lambda)$. The black (solid) line indicates the logarithmic negativity of the mixed state before distillation.

S.Li Zhang, P. van Loock, arXiv:1103.4500 (2011).

Improving entanglement concentration by photon subtraction using local Gaussian operations

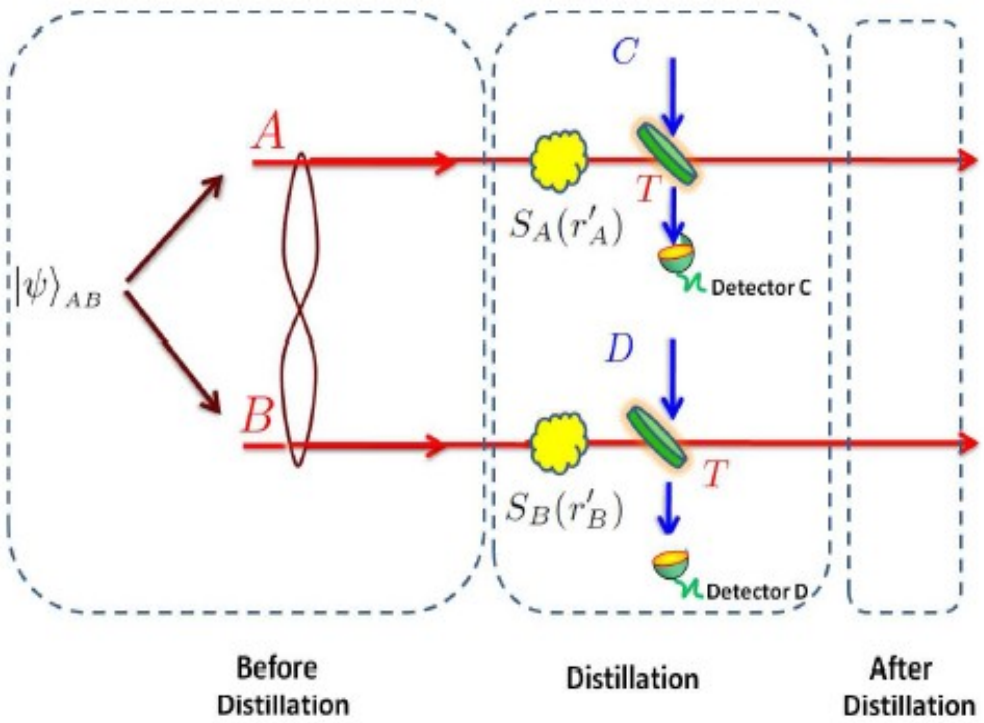

Advantages:

- higher amount of extracted squeezing
- similar success rate as the original protocol

Disadvantages:

- local squeezing still difficult to implement

Possible solution:

- replace squeezing with local displacement

S.Li Zhang, P. van Loock, arXiv:1103.4500 (2011).

Improving entanglement concentration by photon subtraction using local displacements

Zhang & van Loock protocol

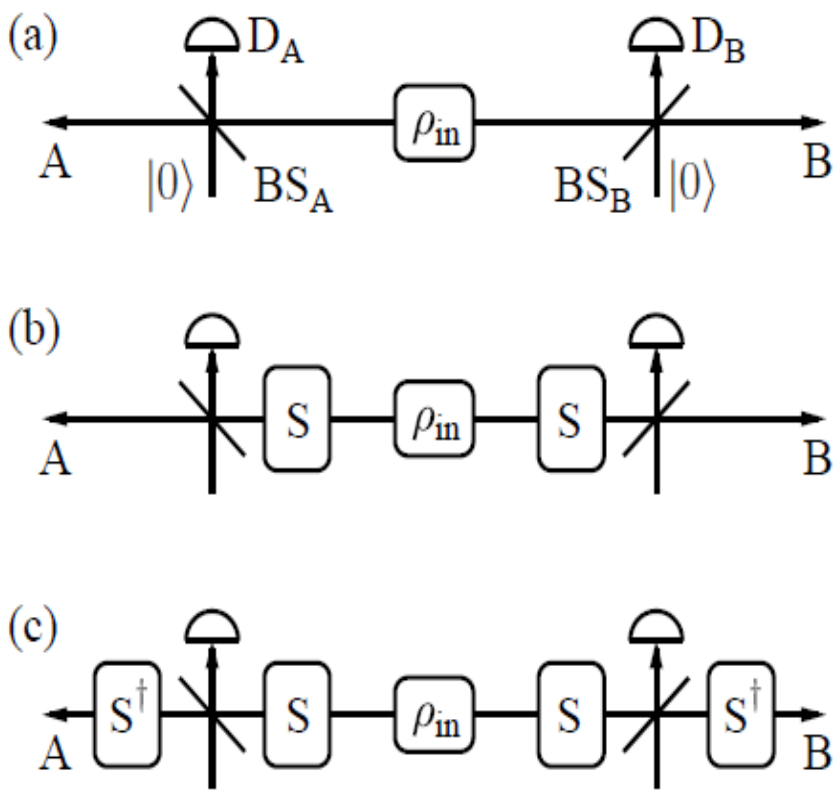

New protocol

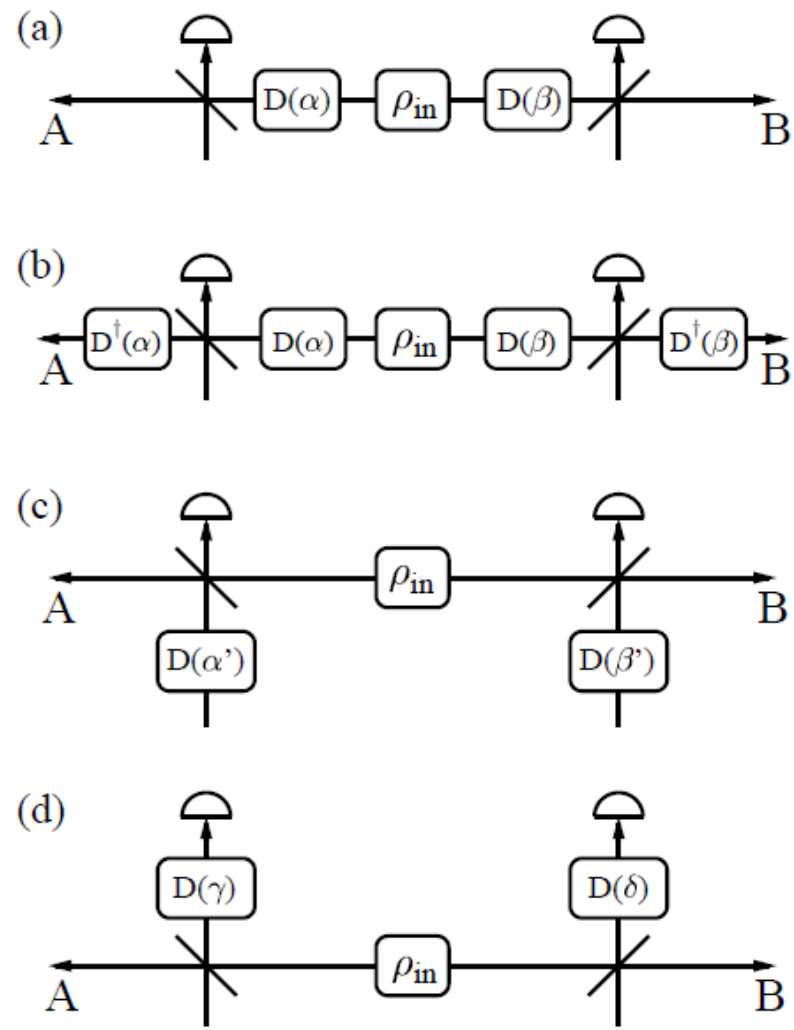

J. Fiurasek, PRA **84**, 012335 (2011).

Improving entanglement concentration by photon subtraction using local displacements

Zhang & van Loock protocol

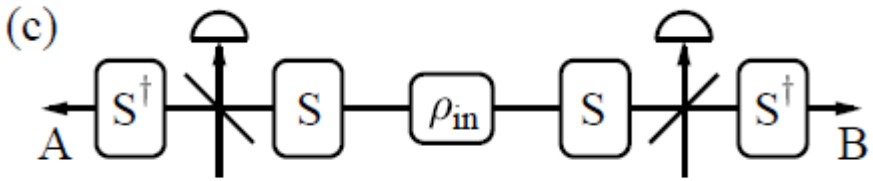

New protocol

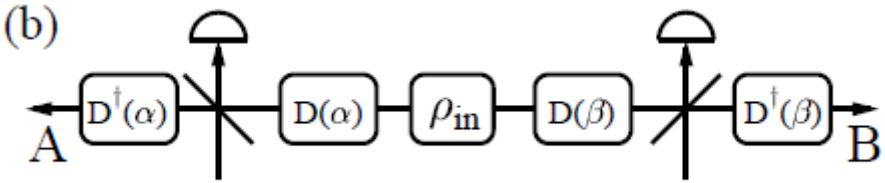

J. Fiurasek, PRA **84**, 012335 (2011).

Improving entanglement concentration by photon subtraction using local displacements

Zhang & van Loock protocol

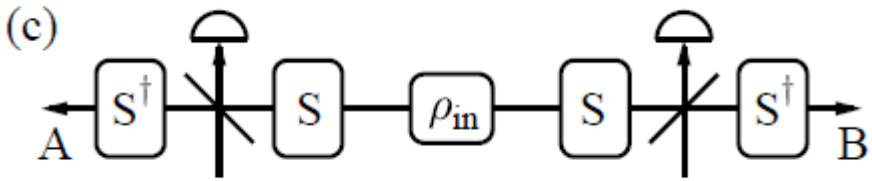

$$|\Phi\rangle_{AB} \propto \hat{S}^{\dagger}_{A}(s)\hat{S}^{\dagger}_{B}(t)\hat{a}\,\hat{b}\,\hat{S}_{A}(r)\hat{S}_{B}(t)|\Psi\rangle_{AB}$$

New protocol

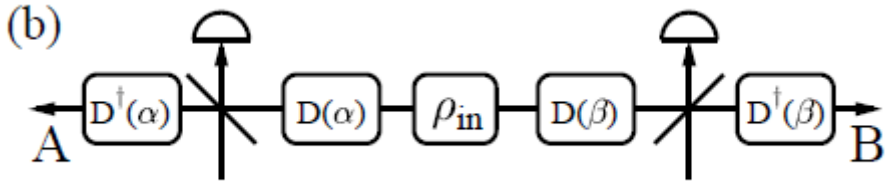

$$|\Phi\rangle_{AB} \propto \hat{D}^{\dagger}_{A}(\alpha)\hat{D}^{\dagger}_{B}(\beta)\hat{a}\,\hat{b}\,\hat{D}_{A}(\alpha)\hat{D}_{B}(\beta)|\Psi\rangle_{AB}$$

J. Fiurasek, PRA **84**, 012335 (2011).

Improving entanglement concentration by photon subtraction using local displacements

Zhang & van Loock protocol

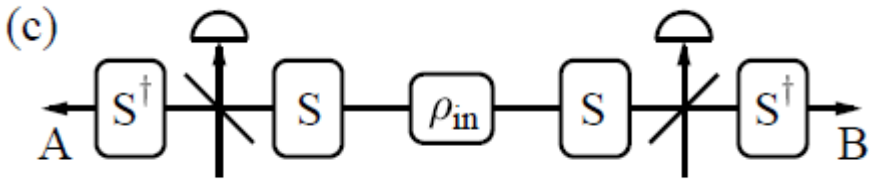

$$|\Phi\rangle_{AB} \propto \hat{S}_A^\dagger(s)\hat{S}_B^\dagger(t)\hat{a}\hat{b}\hat{S}_A(r)\hat{S}_B(t)|\Psi\rangle_{AB}$$

$$|\Phi\rangle_{AB} \propto (\hat{a}+\tanh(s)\hat{a}^\dagger)(\hat{b}+\tanh(t)\hat{b}^\dagger)|\Psi\rangle_{AB}$$

New protocol

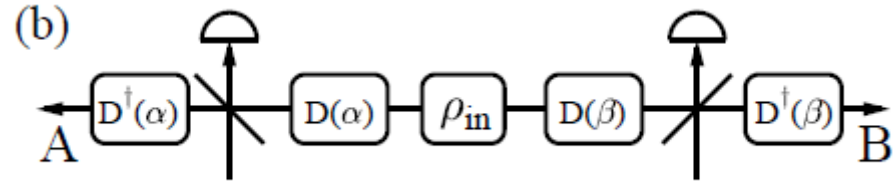

$$|\Phi\rangle_{AB} \propto \hat{D}_A^\dagger(\alpha)\hat{D}_B^\dagger(\beta)\hat{a}\hat{b}\hat{D}_A(\alpha)\hat{D}_B(\beta)|\Psi\rangle_{AB}$$

$$|\Phi\rangle_{AB} \propto (\hat{a}+\alpha)(\hat{b}+\beta)|\Psi\rangle_{AB}$$

J. Fiurasek, PRA **84**, 012335 (2011).

Protocol analysis – weak squeezing limit

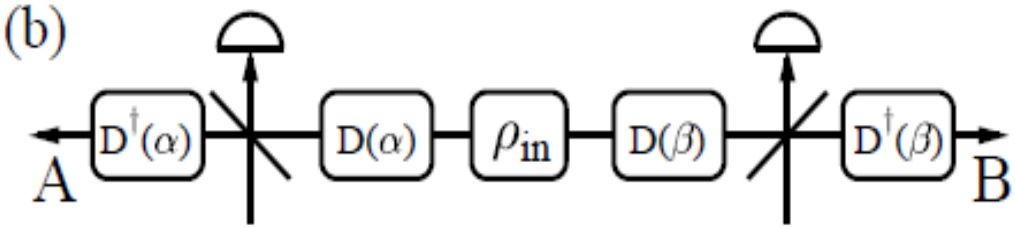

$$|\Phi\rangle_{AB} \propto (\hat{a}+\alpha)(\hat{b}+\beta)|\Psi\rangle_{AB}$$

Input weak two-mode squeezed vacuum state:

$$|\Psi\rangle_{AB} = \sqrt{1-\lambda^2}\sum_{n=0}^{\infty}\lambda^n|n\rangle_A|n\rangle_B \approx |0\rangle_A|0\rangle_B + \lambda|1\rangle_A|1\rangle_B$$

J. Fiurasek, PRA **84**, 012335 (2011).

Protocol analysis – weak squeezing limit

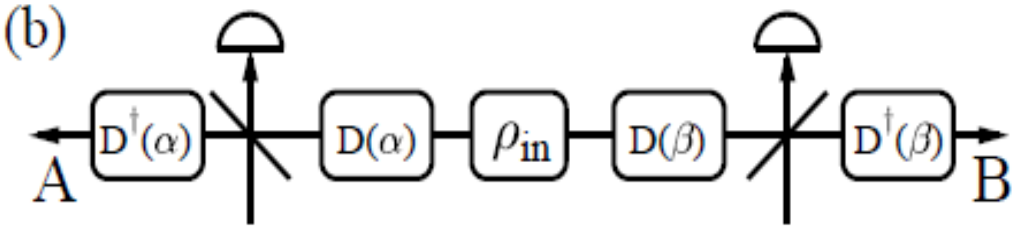

$$|\Phi\rangle_{AB} \propto (\hat{a}+\alpha)(\hat{b}+\beta)|\Psi\rangle_{AB}$$

Input weak two-mode squeezed vacuum state:

$$|\Psi\rangle_{AB} = \sqrt{1-\lambda^2}\sum_{n=0}^{\infty}\lambda^n|n\rangle_A|n\rangle_B \approx |0\rangle_A|0\rangle_B + \lambda|1\rangle_A|1\rangle_B$$

Output state:

$$|\Phi\rangle_{AB} \approx (\alpha\beta+\lambda)|0\rangle_A|0\rangle_B + \lambda\alpha|1\rangle_A|0\rangle_B + \lambda\beta|0\rangle_A|1\rangle_B + \lambda\alpha\beta|1\rangle_A|1\rangle_B$$

J. Fiurasek, PRA **84**, 012335 (2011).

Protocol analysis – weak squeezing limit

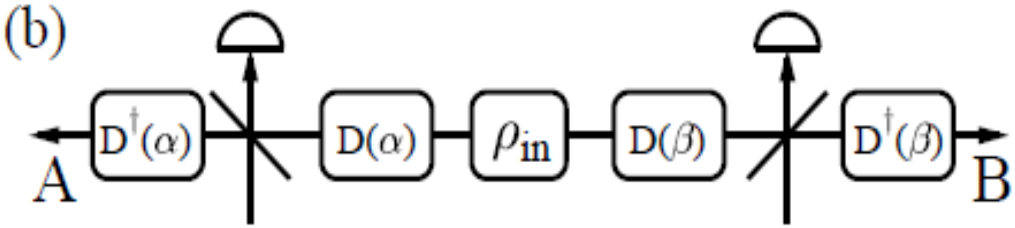

$$|\Phi\rangle_{AB} \propto (\hat{a}+\alpha)(\hat{b}+\beta)|\Psi\rangle_{AB}$$

Output state:

$$|\Phi\rangle_{AB} \approx (\alpha\beta+\lambda)|0\rangle_A|0\rangle_B + \lambda\alpha|1\rangle_A|0\rangle_B + \lambda\beta|0\rangle_A|1\rangle_B + \lambda\alpha\beta|1\rangle_A|1\rangle_B$$

We can extract 1 ebit of entanglement even in the weak squeezing limit.

Protocol analysis – weak squeezing limit

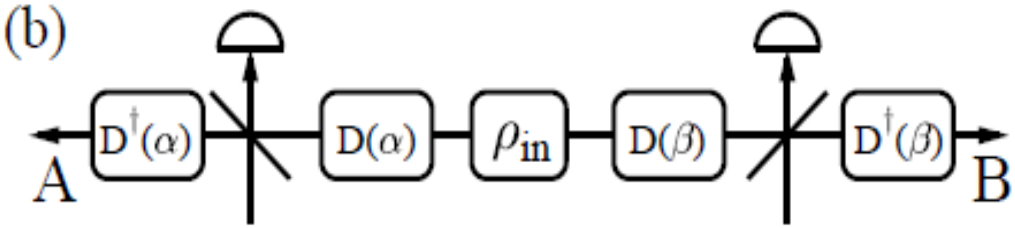

$$|\Phi\rangle_{AB} \propto (\hat{a}+\alpha)(\hat{b}+\beta)|\Psi\rangle_{AB}$$

Output state:

$$|\Phi\rangle_{AB} \approx \cancel{(\alpha\beta+\lambda)|0\rangle_A|0\rangle_B} + \lambda\alpha|1\rangle_A|0\rangle_B + \lambda\beta|0\rangle_A|1\rangle_B + \lambda\alpha\beta|1\rangle_A|1\rangle_B$$

Can be suppressed by destructive Quantum interference:

$$\alpha\beta = -\lambda$$

We can extract 1 ebit of entanglement even in the weak squeezing limit.

Protocol analysis – weak squeezing limit

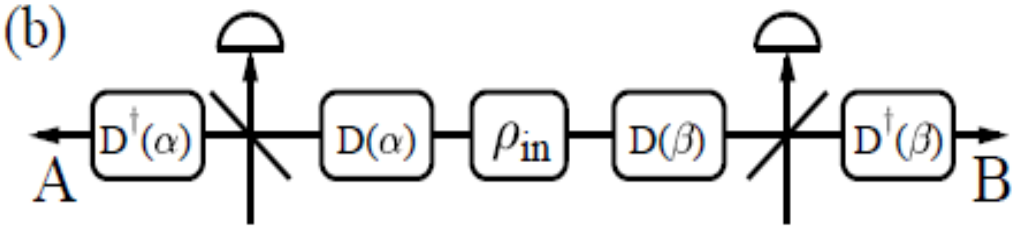

$$|\Phi\rangle_{AB} \propto (\hat{a}+\alpha)(\hat{b}+\beta)|\Psi\rangle_{AB}$$

Output state:

$$|\Phi\rangle_{AB} \approx \cancel{(\alpha\beta+\lambda)|0\rangle_A|0\rangle_B} + \lambda\alpha|1\rangle_A|0\rangle_B + \lambda\beta|0\rangle_A|1\rangle_B + \cancel{\lambda\alpha\beta|1\rangle_A|1\rangle_B}$$

Can be suppressed by destructive Quantum interference:

$$\alpha\beta = -\lambda$$

Can be made negligible:

$$\alpha = -\beta = \sqrt{\lambda}$$

$$|\Phi\rangle_{AB} \approx |1\rangle_A|0\rangle_B - |0\rangle_A|1\rangle_B$$

We can extract 1 ebit of entanglement even in the weak squeezing limit.

Protocol analysis – optimal displacements

Logarithmic negativity of the distilled state

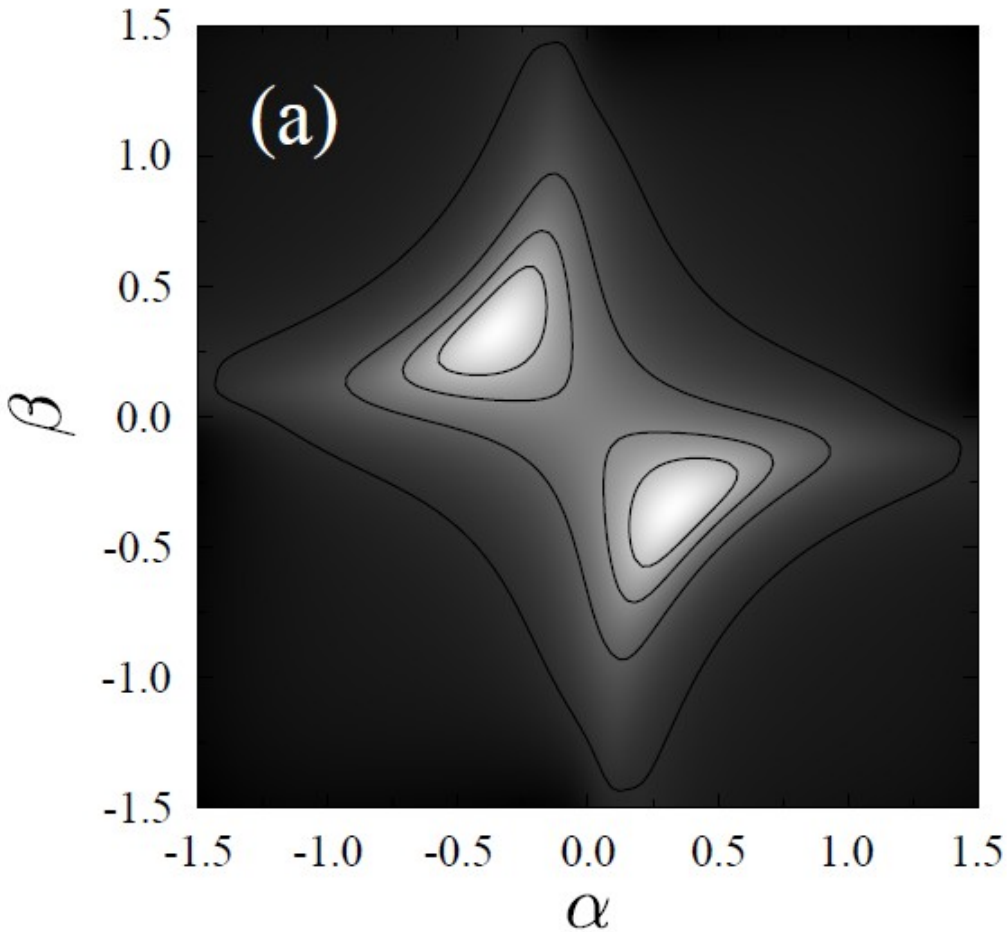

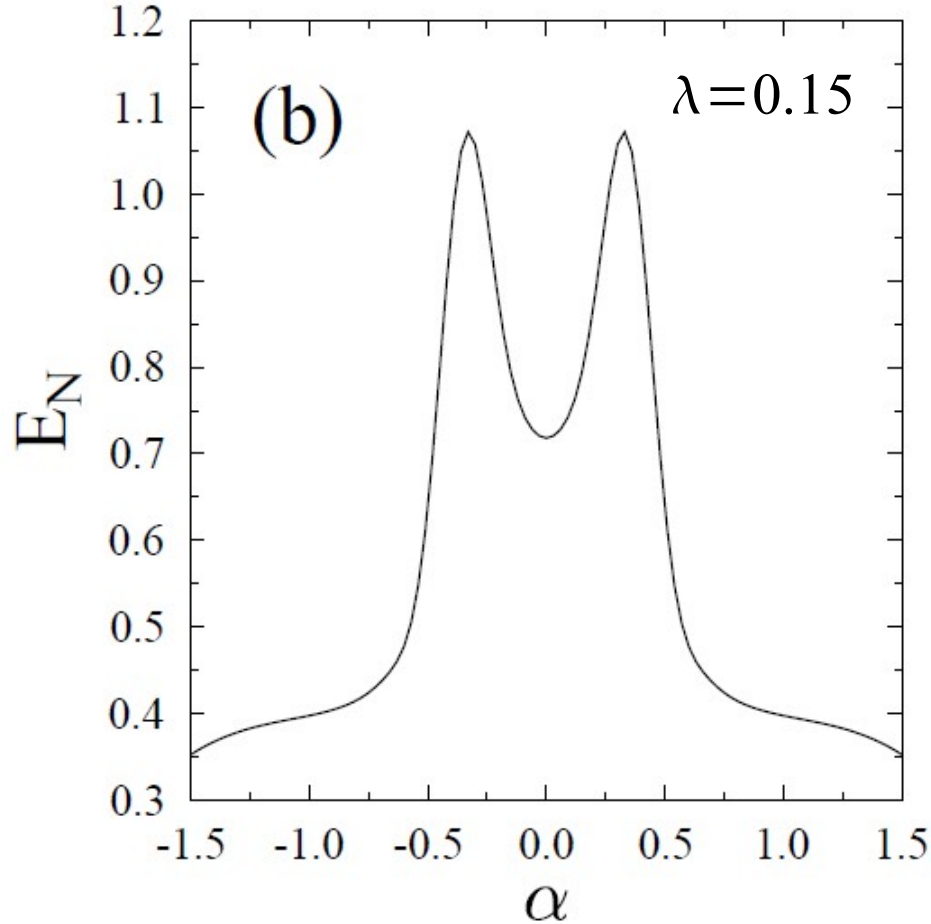

$$\alpha_{opt} = -\beta_{opt}$$

Protocol performance – pure input states

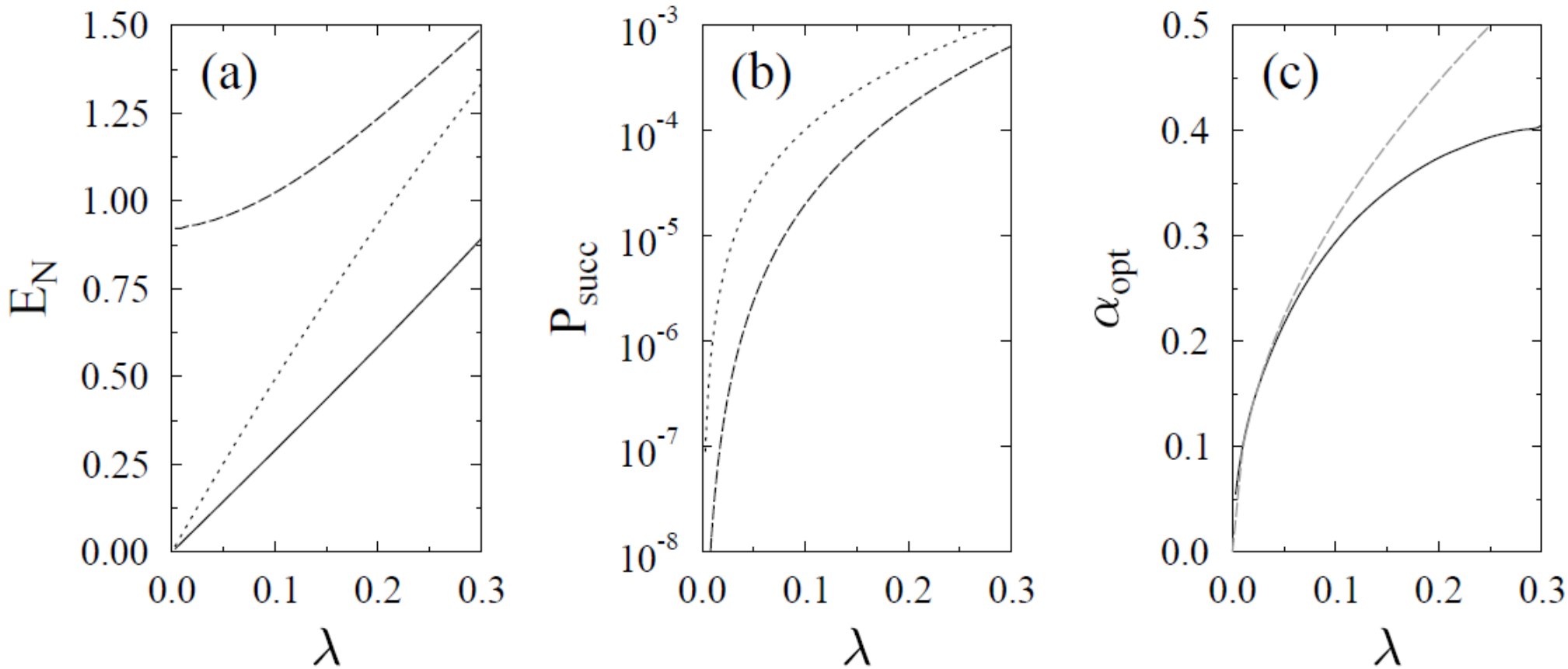

Photon subtraction is performed using beam splitter with reflectance R=0.1

Protocol performance – mixed input states

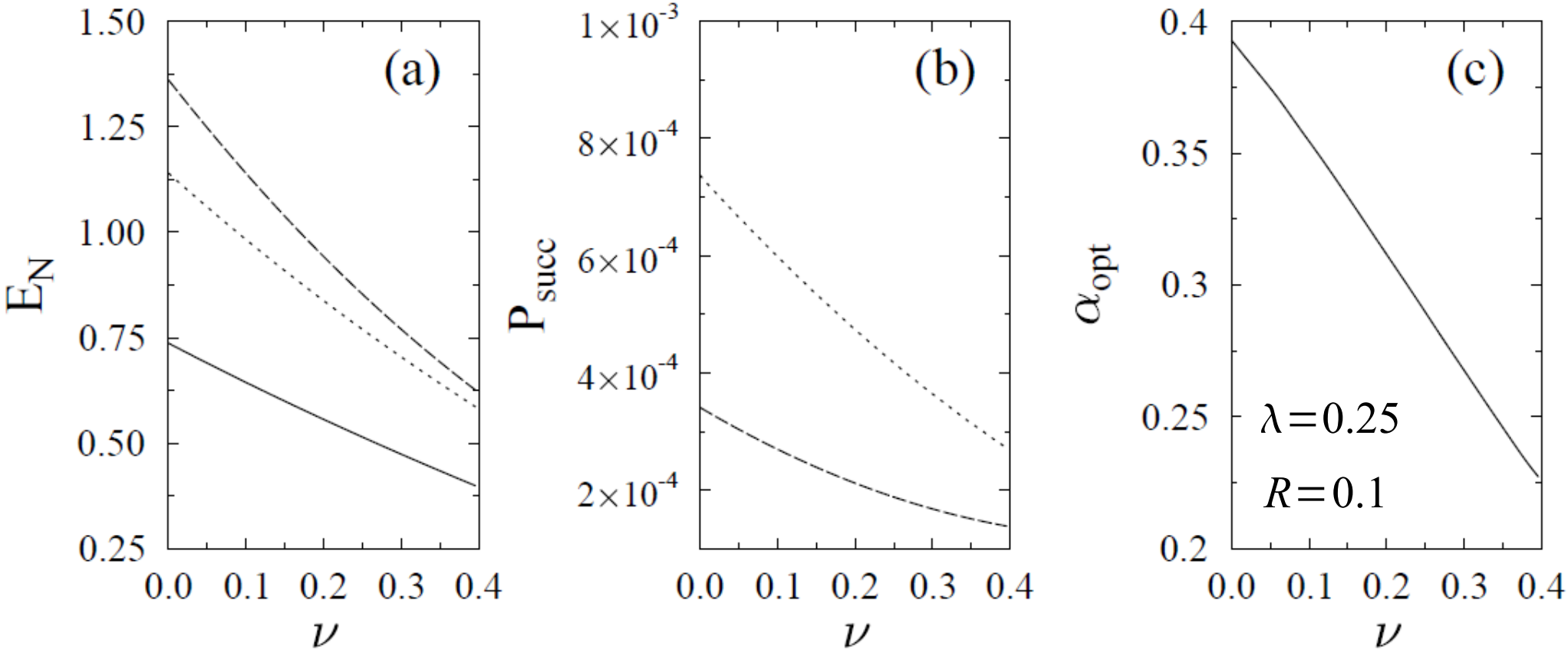

Input state obtained by transmitting each mode of two-mode squeezed vacuum Through a lossy channel.

Channel transmittance: $T_C = 1 - \nu$

Thank you for your attention!